Round 3 - Saturday, June 24, 2023

SHOTLINK

Travelers Championship

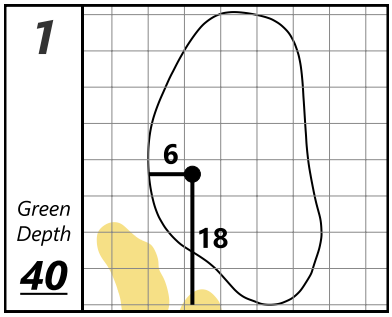

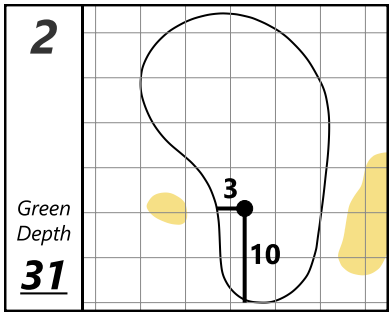

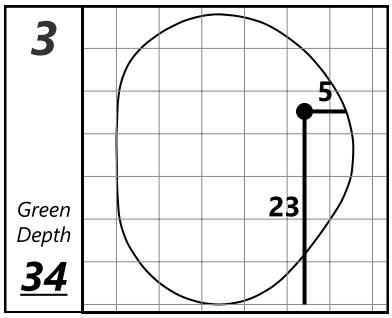

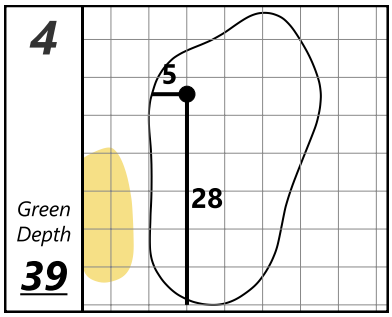

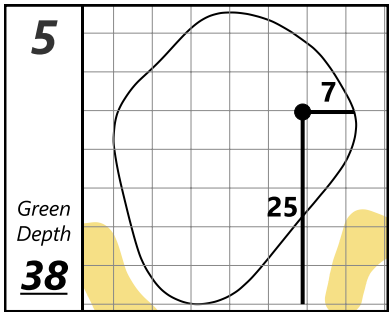

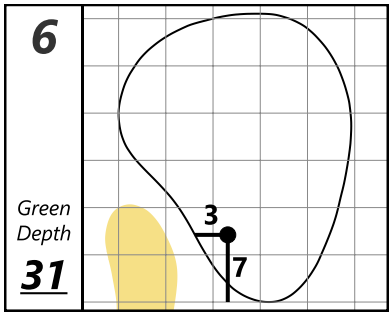

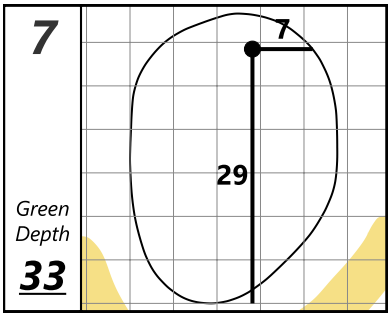

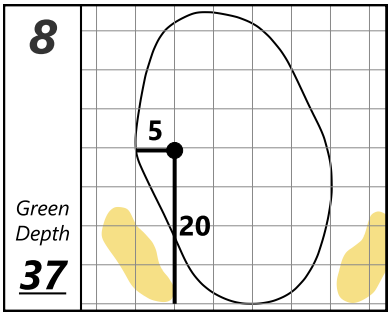

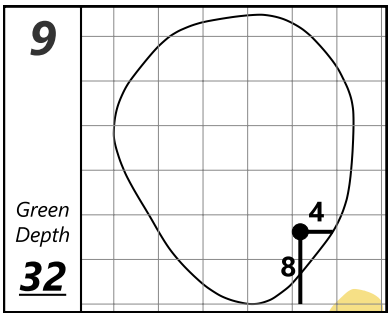

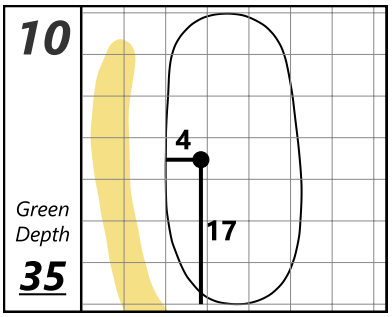

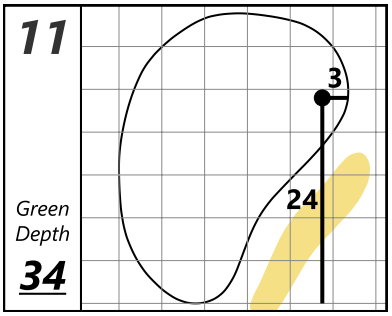

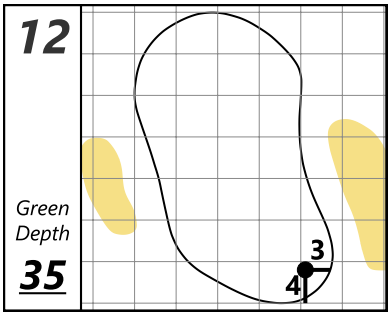

TPC River Highlands

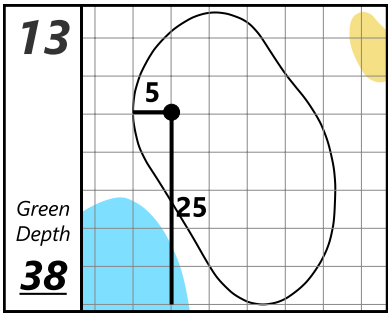

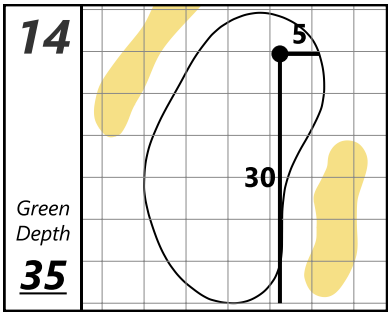

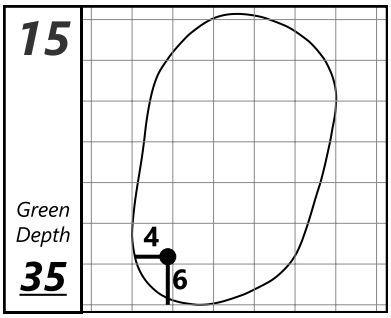

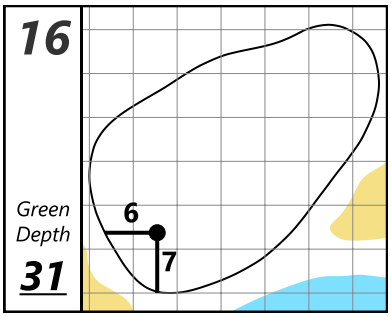

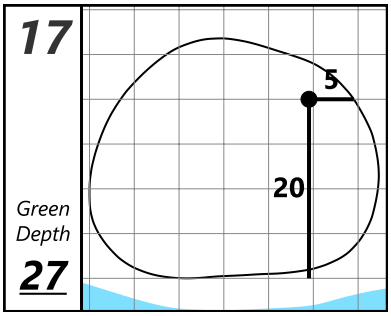

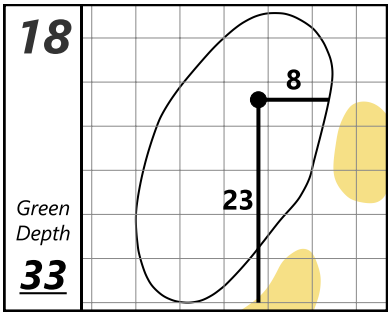

Each side of a complete square on the green represents 5 YARDS

Friday, June 23, 2023 8:36 AM